ALPHA 70

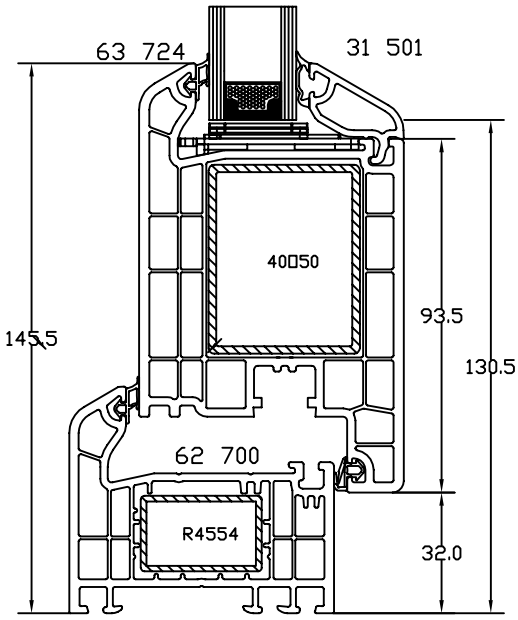
63 724
31 501
40□50
145.5
93.5
130.5
62 700
R4554
32.0

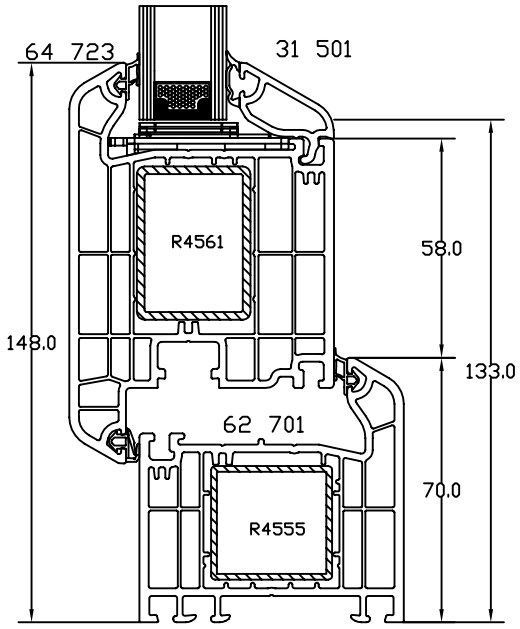
64 723
31 501
R4561
58.0
148.0
133.0
62 701
70.0
R4555

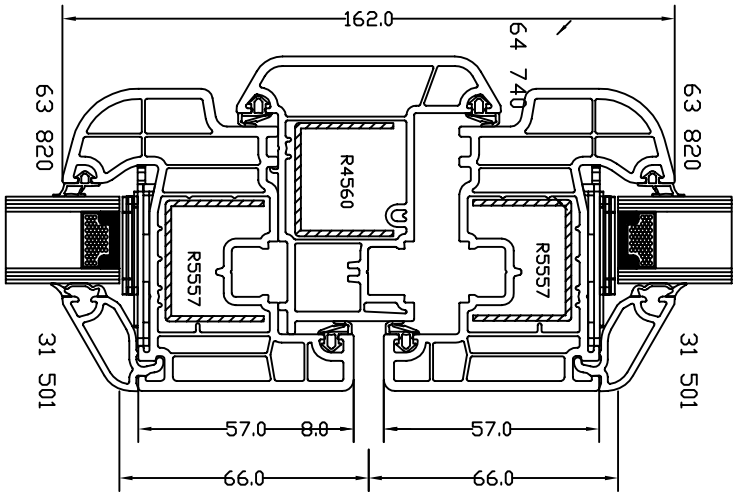
162.0
64 740
63 820
63 820
R4560
R5557
R5557
31 501
31 501
57.0
8.0
57.0
66.0
66.0